HAY STORAGE BUILDING
ASSEMBLY MANUAL

Model # 306515
L20.0 x W9.15 x H4.5m

RECOMMENDED TOOLS

Please read instructions <u>COMPLETELY</u> before assembly. This shelter <u>MUST</u> be securely anchored.

THIS IS A TEMPORARY STRUCTURE AND NOT RECOMMENDED AS A PERMANENT STRUCTURE.

ATTENTION:

This shelter product is manufactured with quality materials. It is designed to fit our custom fabric cover included. Our shelters offer storage and protection from damage caused by sun, light rain, tree sap, animal - bird excrement and light snow. Please anchor this structure properly. See manual for more anchoring details. Proper anchoring, keeping cover tight and free of snow and debris is the responsibility of the consumer. Please read and understand the installation detail, warnings and cautions prior to beginning installation. If you have any questions contact your local dealer.

DANGER:

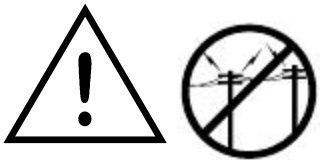

Prior to installation, choose the location of your shelter carefully.

DANGER: ***Keep away from electrical wires.***

Check for overhead utility lines, tree branches or other structures. Check for underground pipes or wires before you dig. DO NOT install near roof lines or other structures that could shed snow, ice or excessive run off onto your shelter. DO NOT hang objects from the roof or support cables.

WARNING:

Risk of fire. DO NOT smoke or use open flame devices (including grills, fire pits, deep fryers, smokers or lanterns) in or around the shelter. DO NOT store flammable liquids (gasoline, kerosene, propane, etc.) in or around your shelter. Do not expose top or sides of the shelter to open fire or other flame source.

CAUTION:

Use **CAUTION** when erecting the frame. Use safety goggles during installation. Secure and bolt together overhead poles during assembly. Beware of pole ends.

PROPER ANCHORING AND INSTALLATION OF FRAME:

PROPER ANCHORING OF THE FRAME IS THE RESPONSIBILITY OF THE CONSUMER.

We are not responsible for damage to the unit or the contents from acts of nature. Any shelter that is not anchored
securely has the potential to fly away causing damage, and is not covered under the warranty. Periodically check the anchors to ensure stability of shelter. We cannot be responsible for any shelter that blows away.
NOTE: *Your shelter's cover can be quickly removed and stored prior to severe weather conditions.* If strong winds or severe weather is forecast in your area, we recommend removal of cover.

CARE AND CLEANING:

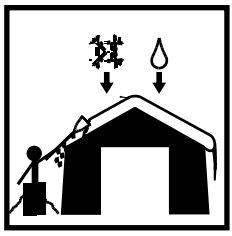

A tight cover ensures longer life and performance. Always maintain a tight cover. Loose fabric can accelerate deterioration of cover fabric. Immediately remove any accumulated snow or ice from the roof structure with a broom, mop or other soft-sided instrument. Use extreme caution when removing snow from cover- always remove from outside the structure. DO NOT use hard-edged tools or instruments like rakes or shovels to remove snow. This could result in punctures to the cover. DO NOT use bleach or harsh abrasive products to clean the fabric cover. Cover is easily cleaned with mild soap and water.

WARRANTY:

This shelter carries a full limited warranty against defects in workmanship. We warrant to the Original Purchaser that if
properly used and installed, the product and all associated parts, are free from manufacturer's defects for a period of:

1 YEAR FOR COVER FABRIC, END PANELS AND FRAMEWORK

Parts List			
Part Code	**Description**	**Qty(pcs)**	**Box**
1	Roof Bent Tube	11	B
2	Middle Bent Tube	18	B
2A	Middle Bent Tube for front and back door	4	B
3	Lower Bent Tube	18	B
3A	Lower Bent Tube for front and back door	4	B
4	Purlins	50	A
5	Base Plate for four corners	4	B
6	Base Plate for front and back door	4	B
7	Base Plate for inner sidewall	18	B
8	Lower Portal for door frame	4	A
9	Upper Portal for door frame	4	A
10	Side Rail for door frame	4	A
11	Crossbeam for door frame(2sets)	2 groups	A
12	Tensioning Tube for front and back door	4	A
13	Support Tube	4	A
13A	Clip for No. 13	8	B
14	Tensioning Tube for Roof Cover(2sets)	22	A
15	Door Bracing Tube(2sets)	2groups	A
16	Stake Peg	52	B
17	Bolt M10x80 for No. 4	55+5	B
18	Bolt M8x70 for No. 1,2,2A,3,3A	156+15	B
19	Bolt M10x30 for No. 10	16+2	B
20	Bolt M8x70 for No. 11	10	B
21	Winch been installed on the base plate	22	B
22	Roof Cover	1	A
23	Front and Back Door Cover	1 each	A
24	Knitting Rope for No. 22,23	1bundle	B
25	Nylon Band for Winch	22	B
26	Plug for No.12,14, 15	14	B
28	Self-drilling screw for No.12	12	B
29	40CM nylon tie for front back cover	130	
30	75CM nylon tie for roof cover	70	

31	Spiral pegs	26	
32	Tools for Spiral Pegs	1set	
33	Wrench	2	
34	Wrench	2	
35	Ratchet	4	

Figure 1:Frame Sketch

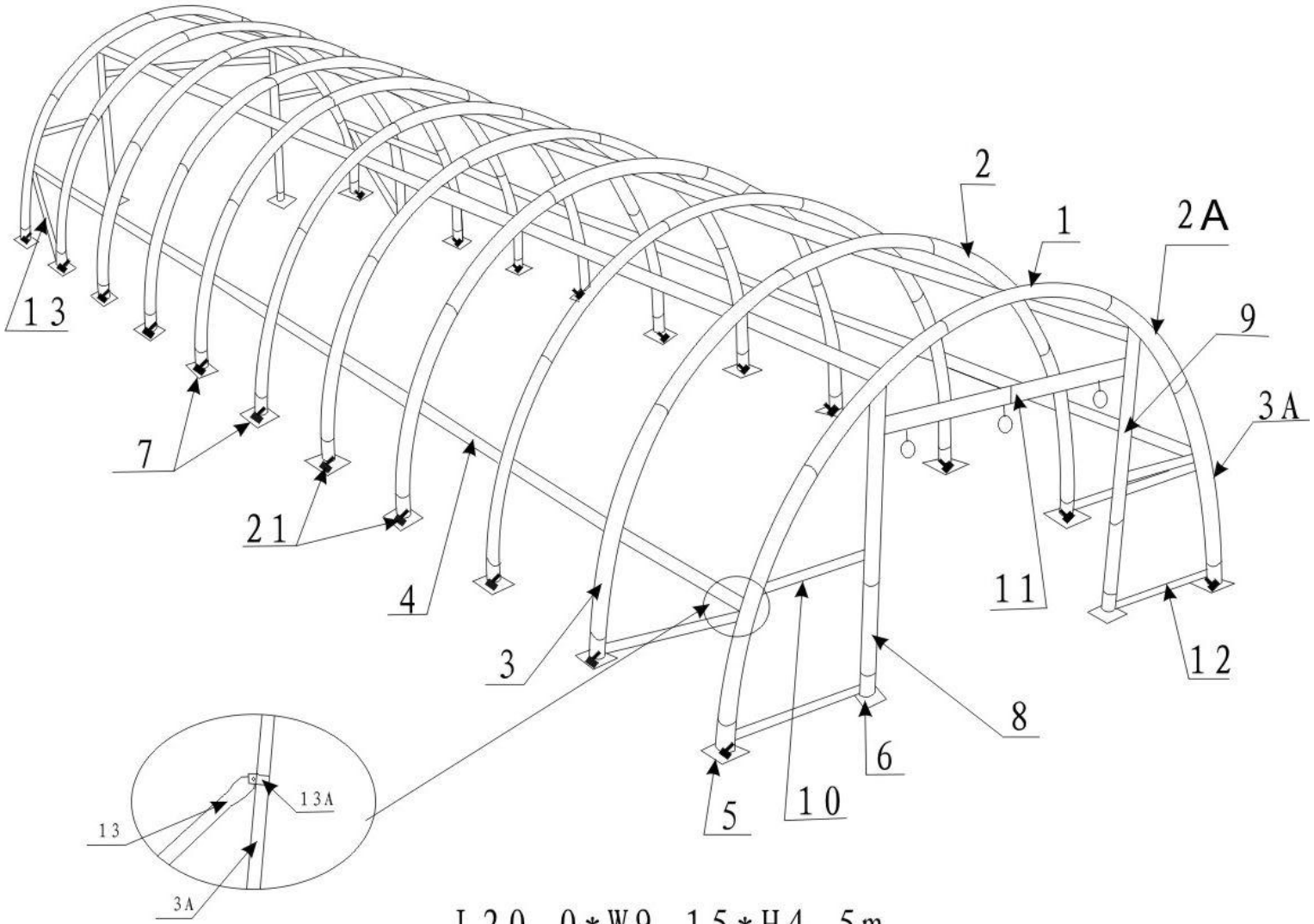

L20.0*W9.15*H4.5m

EQUIPMENT AND MATERIAL FOR INSTALLATION

1. Measuring Tape
2. String for Alignment
3. Stakes
4. Step Ladder
5. Sledge Hammer
6. Drill
7. Wrench

INSTALLATION PROCESS
A—BASE PLATES INSTALLATION

Please refer to the diagram (Figure 2) to place the base plates

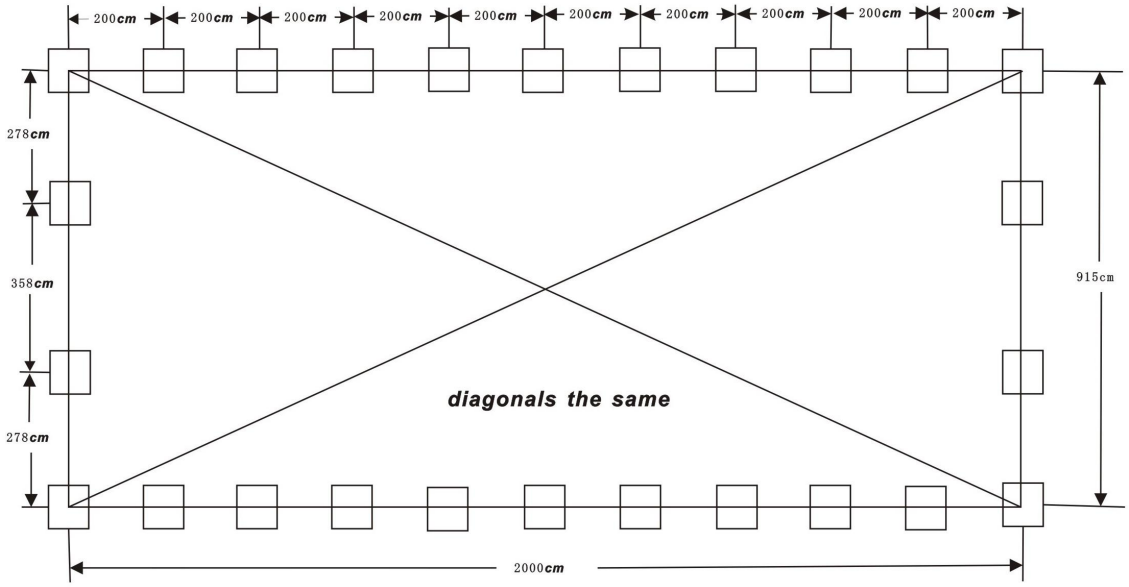

Figure 2

1. The measurement is from center to center of the tubes. Referring to the above diagram and confirm the place of base plates. <u>ENSURE THAT THE FOUNDATION IS SQUARE.</u>
2. There are three holes on the Base Plates (No.5, 7) and two holes on the Base Plate (No. 6), for Stake Peg (No. 16). Refer to Figure 3 to place the stake pegs, <u>THUS ALL BASE PLATES ARE SECURED.</u>

Foundation placement

As Figure 3 shows each Base Plate (No.5, No.6 & 7) is equipped with 2 pieces of Stake Pegs (No.16) and 1 piece of sprial pegs(No.31)

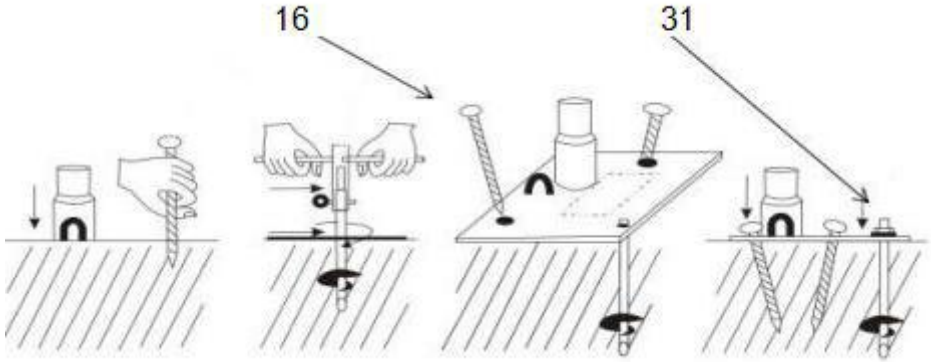

Figure 3

Method of Placing Stake pegs

Mark the position through the hole of base plate by using the stake peg. Move the base plates away and the mark determines where the stake peg will be.

Note: The stake peg apply for normal conditions, not suitable to the rock ground, frozen soil and concrete ground.

B—FRAME INSTALLATION

1. As Figure 4 shown find Roof Bent Tube (No.1), Middle Bent Tube (No. 2) and Lower Bent Tube (No. 3) and assemble them with Bolt M8x70 (No.18) DO NOT installs the bolts on the top of the truss where the fabric will rest.

Note:

(1) Middle Bent Tube and Lower Bent Tube for two ends (No.2A & 3A) which are welded with steel plates for upper portal (No. 9) and Side Rail (No.10) are different from the middle.

(2) Clips (No.13A) for Support Tube (No.13) should be installed to the arch first.

2. Lift an assembled arch onto one base plate and force the other end of the arch onto the opposite base plate.

IMPORTANT: THE ARCHES WILL BE WIDER THAN THE BASE PLATES

3. When finish installing the first two arches into the base pates, use Purlins (No. 4) to connect them by Bolt M10x80 (No.17). Then install the third arch into the plate and connect the Purlin. In this turn, one arch and then purlins. Then come to install the front panel and back panel. Find the relative components and assemble them.
4. Connect the Support Tube (No.13) with Clip (No.13A) between the Lower Bent Tubes as Figure 1.

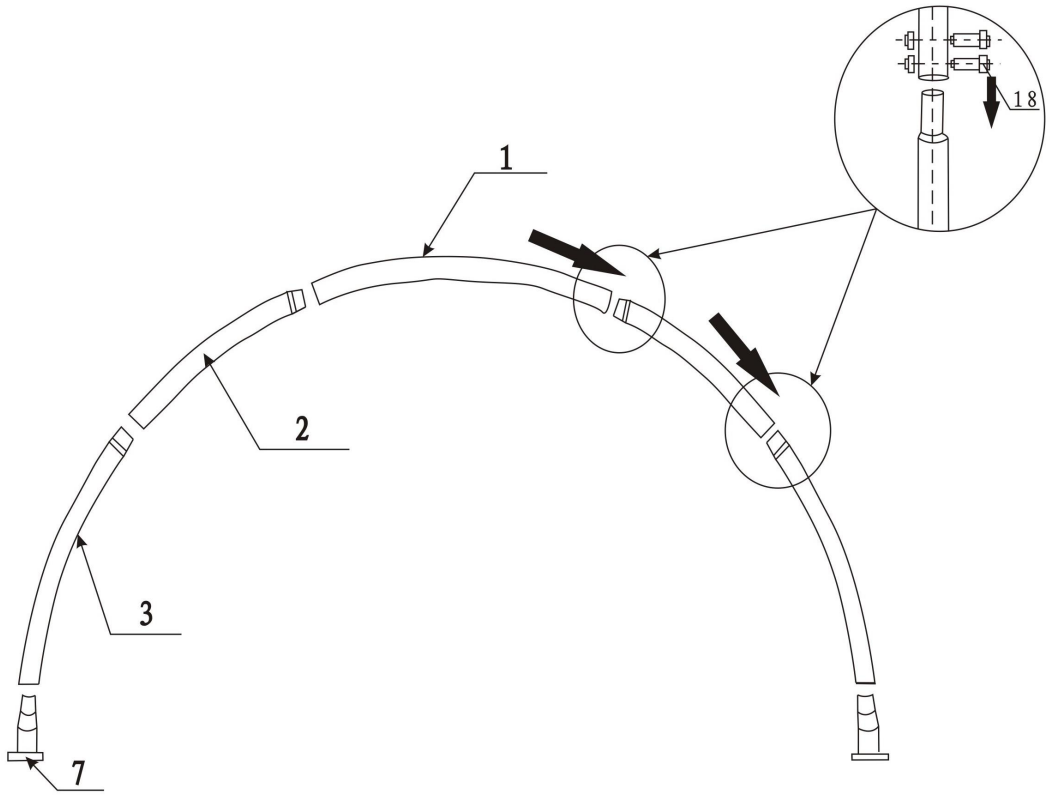

Figure 4

C-INSTALLING THE ROOF COVER

NOTE: DO NOT install the cover onto the frame of your building in high wind conditions. A slight breeze is the most advantageous for cover installation. To take advantage of the breeze, pull the cover up over the arches with the breeze blowing in the cover like a sail filled with air.

1. Roll out the roof cover on a ground sheet. Align the cover evenly to each end of the frame.
   Note: Be sure don't overpull the end of the roof cover. **the marks " arch" on the roof cover is against the front wall arches and back wall arches, the marks "center" on the roof cover is against the middle top purlins.**

2. Pull the cover over the frame EVENLY, CAREFULLY AND SLOWLY. Adjust the cover so that it is square and evenly centered on the frame. Cut a hole in the cover pipe pocket above winch (for Nylon Band No.25). Insert the tension tubes (No.14) into the pockets and loosely secure the Nylon Band in the Winch. DO NOT TIGHTEN.

3. Use the supplied rope No.24 to tighten the roof cover to the end arches. The rope should be cut as your requirements when using. Then use nylon tie No.30 to further fix the roof cover. The recommended procedure is to use separate pieces of rope and start by first lacing the cover from the bottom edges up to the top center. Pull the Nylon Band through the reels of Winch. Drive the Winch tie down forth and back and then roof cover is tightened.

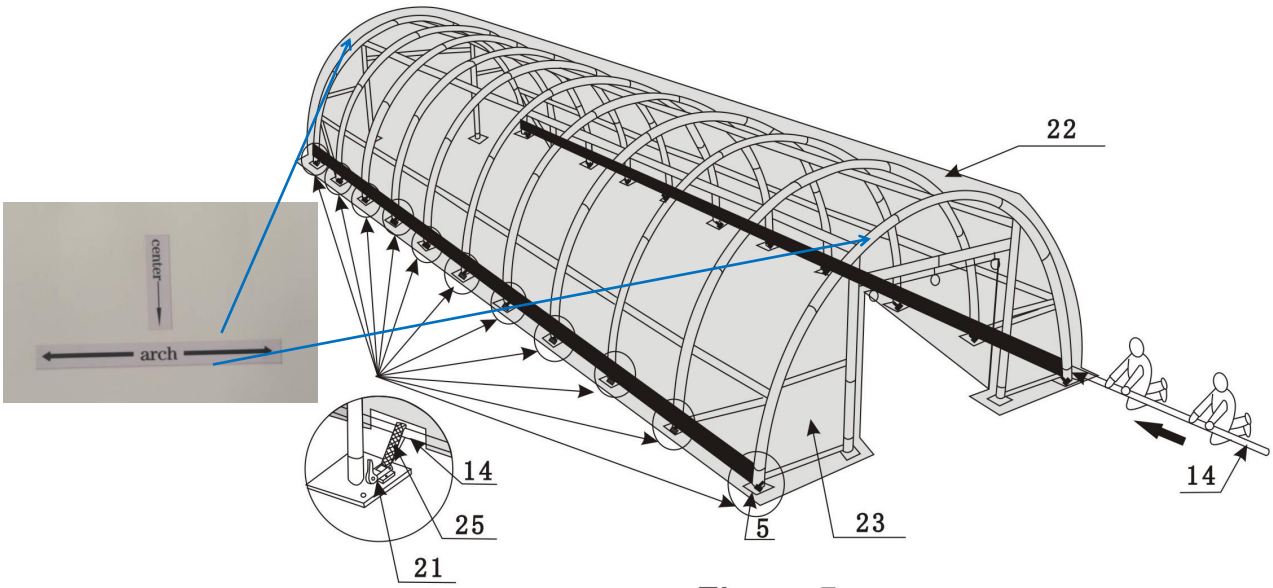

Figure 5

Note: The end flaps must overhang evenly at both ends.

D-INSTALLING THE FRONT AND BACK COVER

1. Use Knitting Rope No.24 and nylon No.29 to lace the grommets in the end to the tubes evenly.

Note: The edge of front & back covers don't need to be wrapped to the end arches

Method of Fastening Front and Back Cover

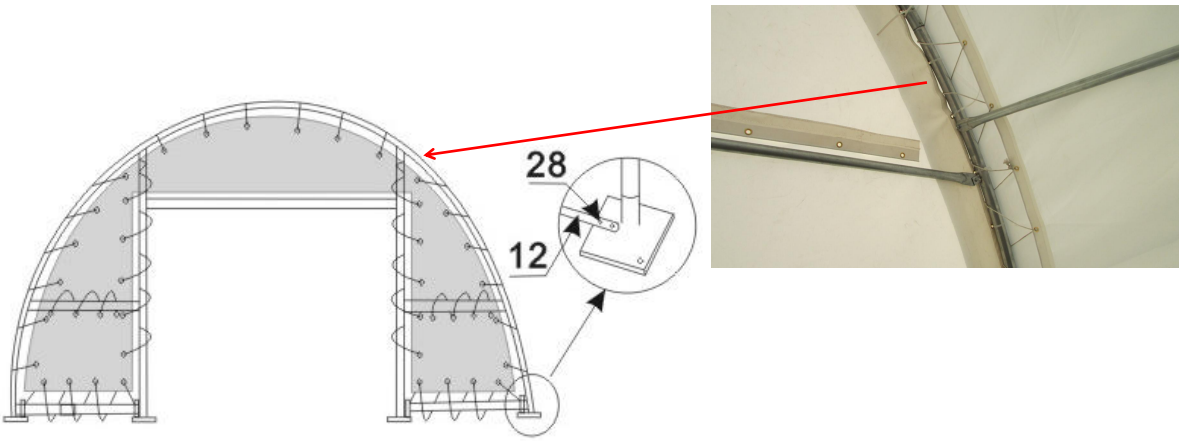

Figure 6

2. Tidy the Roof Cover, Back Cover and Front Cover. Fasten the band inside the end of the roof cover. Make the cover well fold to the frame and tighten the end of the band by ratchet No.35 to the ring on Base Plates No.5 at four corners.

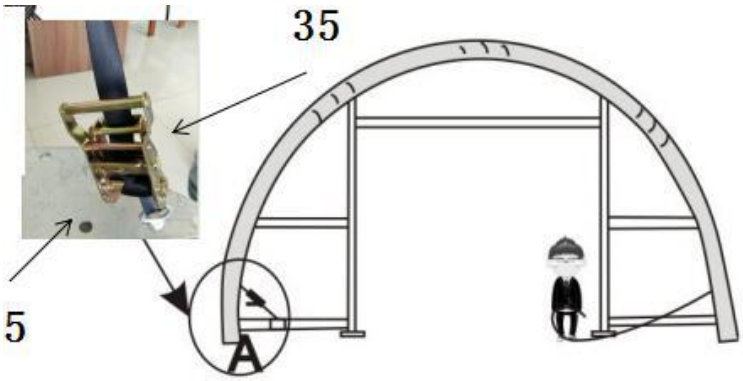

Figure 7

NOW THE INSTALLATION IS FINISHED